TECO	OUTLINE DIMENSIONS 3-PHASE INDUCTION MOTOR	FRAME NO : D71

POLE	kW	HP	SYNC RPM
2	0.37	0.50	2800
2	0.55	0.74	2800
4	0.25	0.34	1380
4	0.37	0.50	1400

Totally Enclosed Fan-Cooled Type, Squirrel-Cage Rotor.

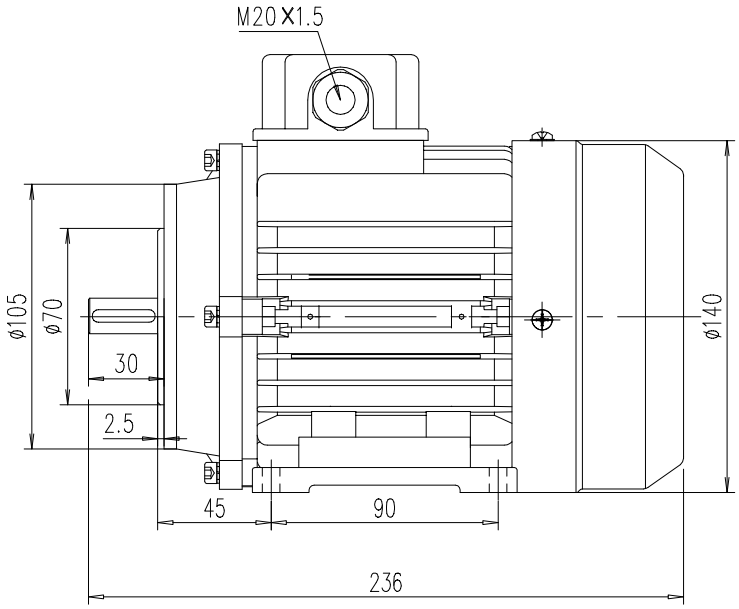

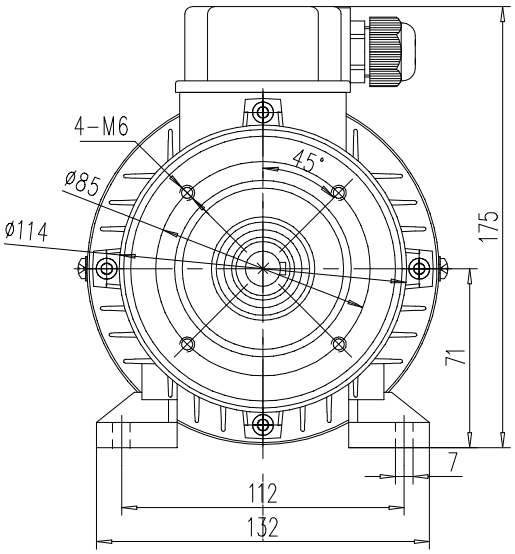

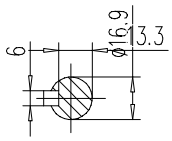

NOTES:
1. DIMENSIONS IN mm.
2. SCALE 1: 3.
3. FOOT AND C FLANGE MOUNTED IM2101.
4. FOR DIRECT DRIVE ONLY.
5. IP55 PROTECTION.

MAX ALLOY

DWN.	DP	16. 12. 24	REV : 00
CHKD.	AN	16. 12. 24	
APPD.	JC	16. 12. 24	